# 12 x 11 Sew-AdjusTable Mini-MATE

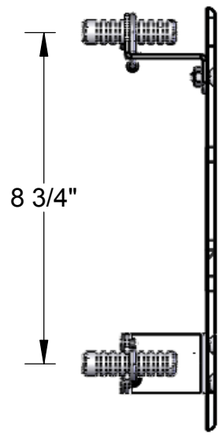


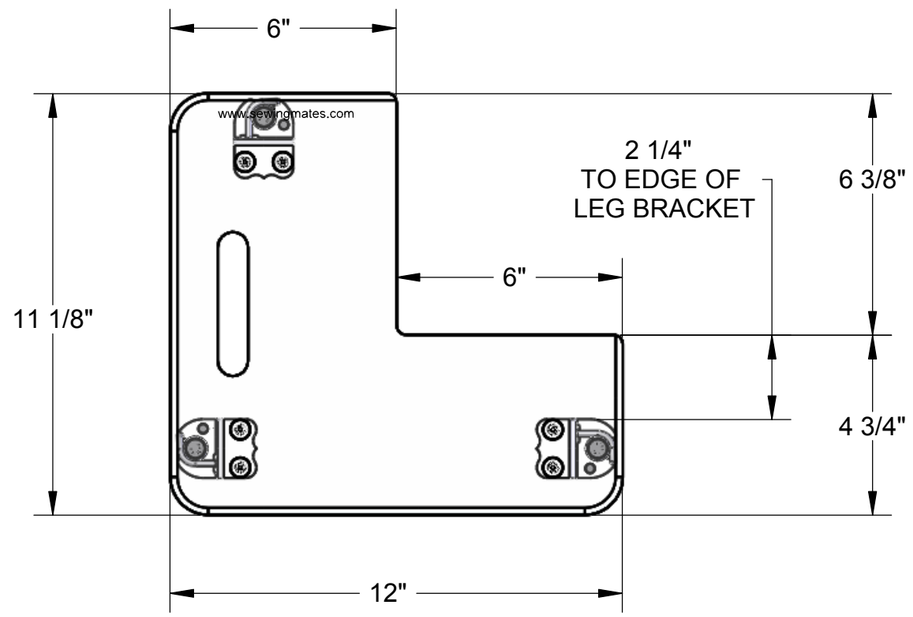

LEGS ON ALL MODELS OF THE TABLE
ADJUST FROM 2-3/4" TO 4-1/2"
IN 1/8" INCREMENTS OR DOWN TO
2-1/2" BY REMOVING LEG EXTENSIONS

A SHORT LEG OPTION GIVES
A RANGE OF 2-1/2 TO 4" AND 2-1/4"
BY REMOVING LEG EXTENSIONS.
AVAILABLE ON REQUEST.